UNIVERSITI TEKNOLOGI MALAYSIA

www.utm.my

Project Digital Logic

Electronic Lift/Elevator Controller System (Simulation Using Deeds Software)

Prepared by Dr Foad

2025/2026-1

FACULTY OF COMPUTING

This project is to implement knowledge from this course by simulating the real case outside from class.

Strategies used:

- Group self explore
- Creative problem solution and design
- Good presentation, reporting & demo session

Requirement for Conducting Project

- Form a group consists of max 4 students
- Understand the case study
- Design the circuit.
- Prepare Project Report
  - Show the details design in Project Report
- Prepare project slide presentation and present the project
  - Convert the project report to presentation format
  - Each members should take part in presentation
  - Offline video recording

Requirement for Conducting Project

- Demo the circuit
  - Show and test the result
  - Offline video recording, publish online

- Submit in e-learning
  - Project Report
  - Presentation Slide
  - Video recording → use YouTube to publish (unlisted link), share the link
  - Complete Deeds Circuit file

Due date:

- 25 January 2026 (end of study leave)

Project Componet

- This project is done in a group of 3 or 4 students
- Combinational Circuit
  - Combinational Logic (Comparator, Pattern Detector, Decoder, Mux/DeMux, etc.)
  - Advanced/Accessories – depend on creativities
- Sequential Circuit
  - Sequential Logic (Counter Design)
  - Clock Enabler
  - Advanced/Accessories – depend on creativities
- Integration
  - Combinational logic
  - Sequential Logic
  - Advanced/Accessories – depend on creativities

Part 1: Basic Controller
Part 2: Advanced Controller (Deeds)

Example of System Controller in Real Life
- Lift/Elevator Building
- Photostat Machine
- Car Park
- Washing Machine
- ATM machine (Bank)
- Vending

Design System Controller
- Choose a real system from the list, and study how the system's work.
- Determine
  - Input
  - Process
  - Output
- Categories which part of the system fall under Combinational Logic or Sequential Logic
- Each member of the group, think of an advanced feature that you want to add into your existing circuit to produce an advanced controller system.

Case Study: Lift Operational Scenario (behavioral):

You may choose any system that you want to design the controller and studies how the system's work. Example System Chosen: To Control Lift Building UP or DOWN

`A hotel **visitor** want to use a building lift to **go up** from one level to another. The **requirements** are put in the **desired le**vel to go**, tag** the visitor room card, **closed** the lift door, **and push UP** button. Then, the lift will **goes up** by counting up one level to another until it **reaches** to the desired level. The door will **open and** at the same time **alert** will be given to the visitors. Similarly, the **reverse process** happen when the visitor want to go down. The counting sequence will decrease until it reaches to the desired floor.

- Lift UP
  - Password
  - Key in level up
  - Tag in card hotel
  - Door Close
  - Lift goes up to destination
  - Lift stop at destination
  - Sound notification
  - Door Open

- Lift DOWN
  - Password
  - Key in level down
  - Tag in card hotel
  - Door Close
  - Lift goes down to destination
  - Lift stop at destination
  - Sound notification
  - Door Open

Circuit Controller (8 level building) - BASIC

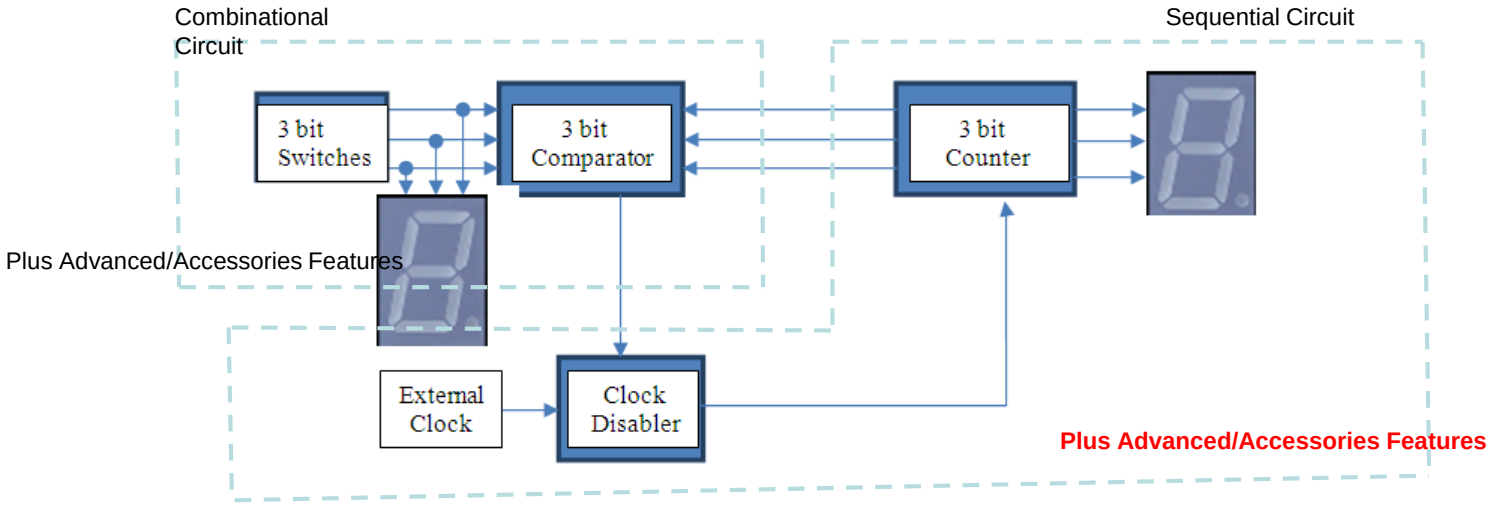

Figure1. A block diagram of a complete system

Clock Disabler (Enabler) (Pattern Detector)

When counter value NOT EQUAL TO Input Switch value, Then Clock is Active
When counter value is EQUAL TO Input Switch value, Then Clock is NOT Active

Project Idea & Implementation

- Determine
  - Input
  - Process (Component)
  - Output
- Categories which part of the system fall under **Basic** Lift Controller and **Advanced** Lift Controller

Options of System Controller in real life
- Lift/Elevator Building
- Photostat Machine
- Car Park
- Washing Machine
- ATM machine (Bank)
- Vending Machine

Combinational Circuit

- MSI Function
  - Comparator
  - Mux
  - Demux
  - Decoder
  - Encoder
- Basic Gates

Sequential Circuit

- Counter/Memory
  - Counter Design
- Clock Enabler

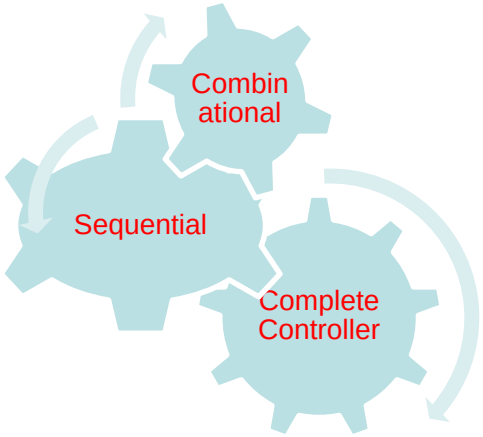

Add ON Accessories / Advanced Features
- E.g. Welcoming Notes, Security, Interactive Display System, Etc

Project Idea & Implementation

- Determine component function that can be categorized as Combinational and Sequential Circuit
- Example features to be considered:
  - Compare Value
  - Pattern Detector
  - Authentication
  - Controlled input
- Design the component circuit
- Integrate combinational and sequential components to produce a complete controller system
- Simulate the circuit
  - Operate base on the required operation

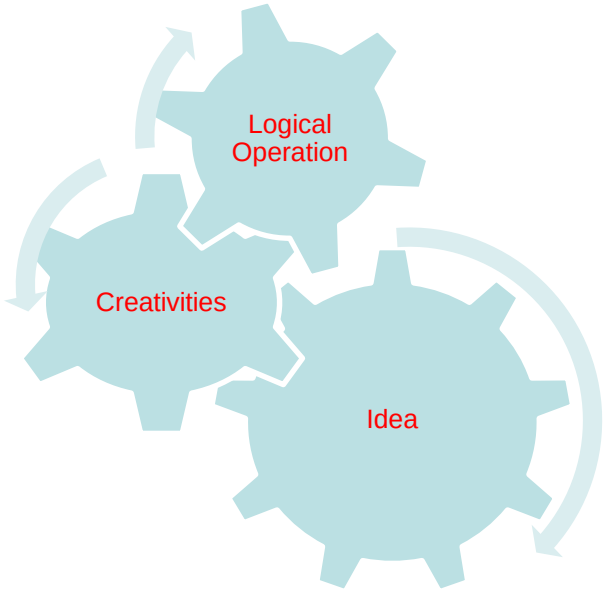

Part 1: Basic Controller
Part 2: Advanced Controller (Deeds)

Basic Design Controller (Part 1)

Basic controller will use 3 different components. These components are:

1. Count Up Counter (Synchronous)
2. Comparator
3. Decoder (Pattern Detector) – Clock Enabler

Choose Your Group Option Design in slide pg. 24

Core components

CIRCUIT OVERVEW

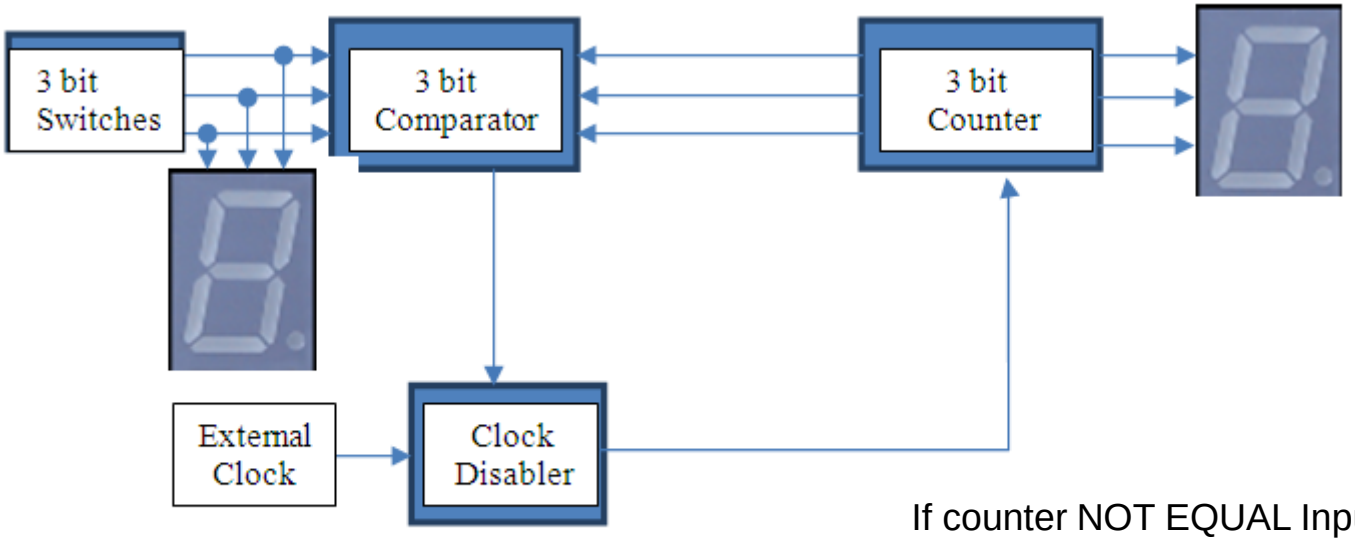

If counter NOT EQUAL Input Switch
Clock is ON

Figure1. A block diagram of a complete system

Clock Disabler (Pattern Detector)

When counter NOT EQUAL Input Switch
Clock is Active
When counter EQUAL Input Switch
Clock is NOT Active

Synchronous Counter

Synchronous Counter Design:

- Draw desired state diagram (up down saturated counter)
- Choose flip-flop type (JK, T, D)
- Produce Next State and Flip-flop transition table
- Use K Map to get simplified SOP flip-flop input equation
- Draw complete diagram design (synchronous up/down – saturated counter)
  - Common clock

- To complete the circuit (refer overall circuit diagram)
  - Design Comparator (Equality)
    - Compare desired floor and current counter output
  - Design Clock Enabler gate

Comparator: Equality (XNOR)

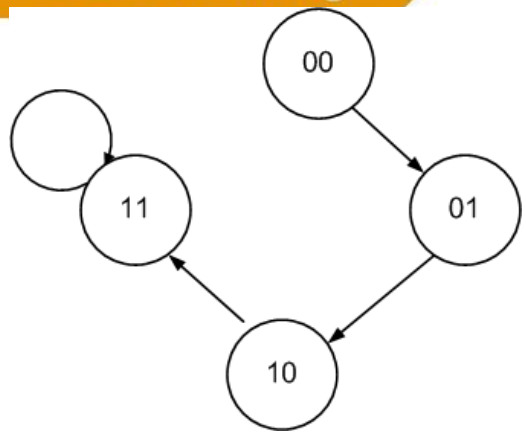

Example: State Diagram (2 bit)

Saturated Count up Counter

A	B	A XNOR B
0	0	1
0	1	0
1	0	0
1	1	1

2-Bit Equality Comparator

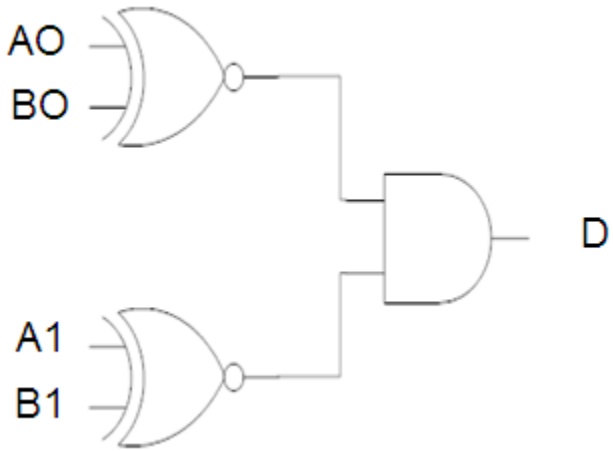

Output Active HIGH

A=B, D=1
A!=B, D=0

Output Active LOW?

Decoder
(Pattern Detector)
-clock disabler

(a)

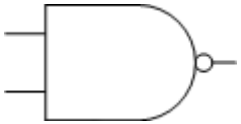

(b)

(a) Output Active HIGH

(b) Output Active LOW

Clock Enabler

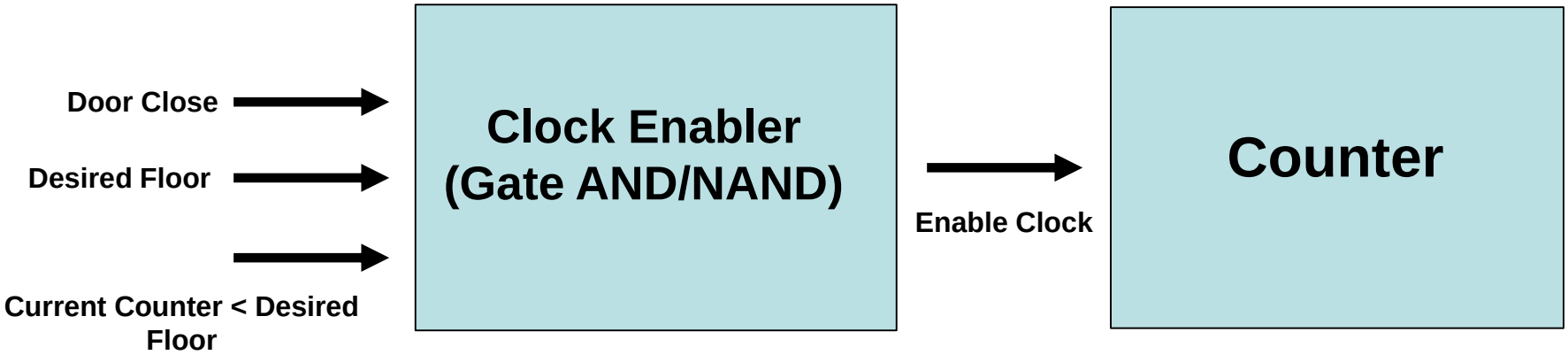

Rule to Activate the Clock (overall system): **Basic Rule**

If Door (close) and Desired Floor (enter) and Up/Down (enter) and Current counted floor is less than Desired Floor
then Output HIGH (clock is activated – counter will count)
else Clock Disable

Advance Rule?

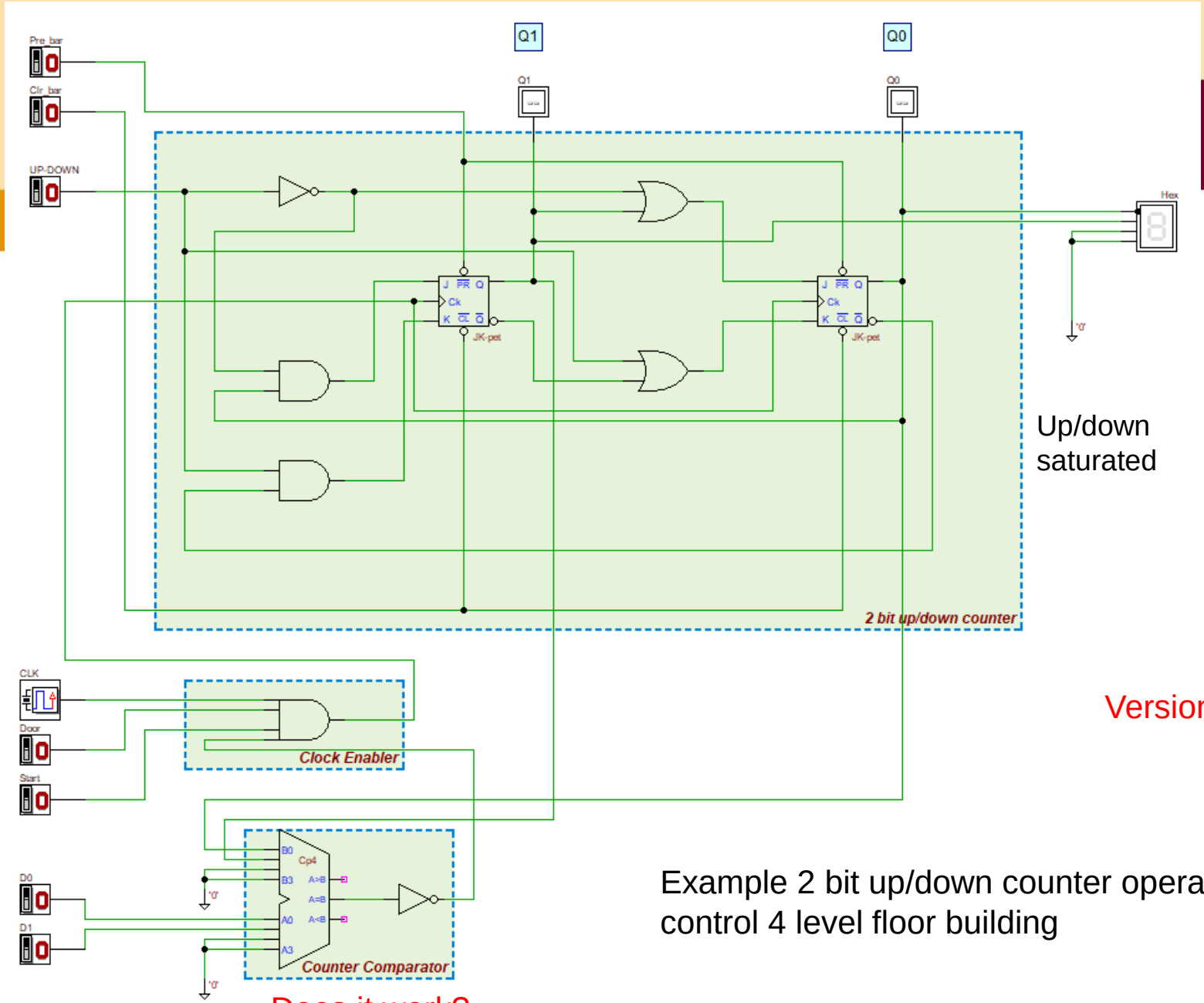

Up/down saturated

Version 01

Example 2 bit up/down counter operation to control 4 level floor building

Does it work?

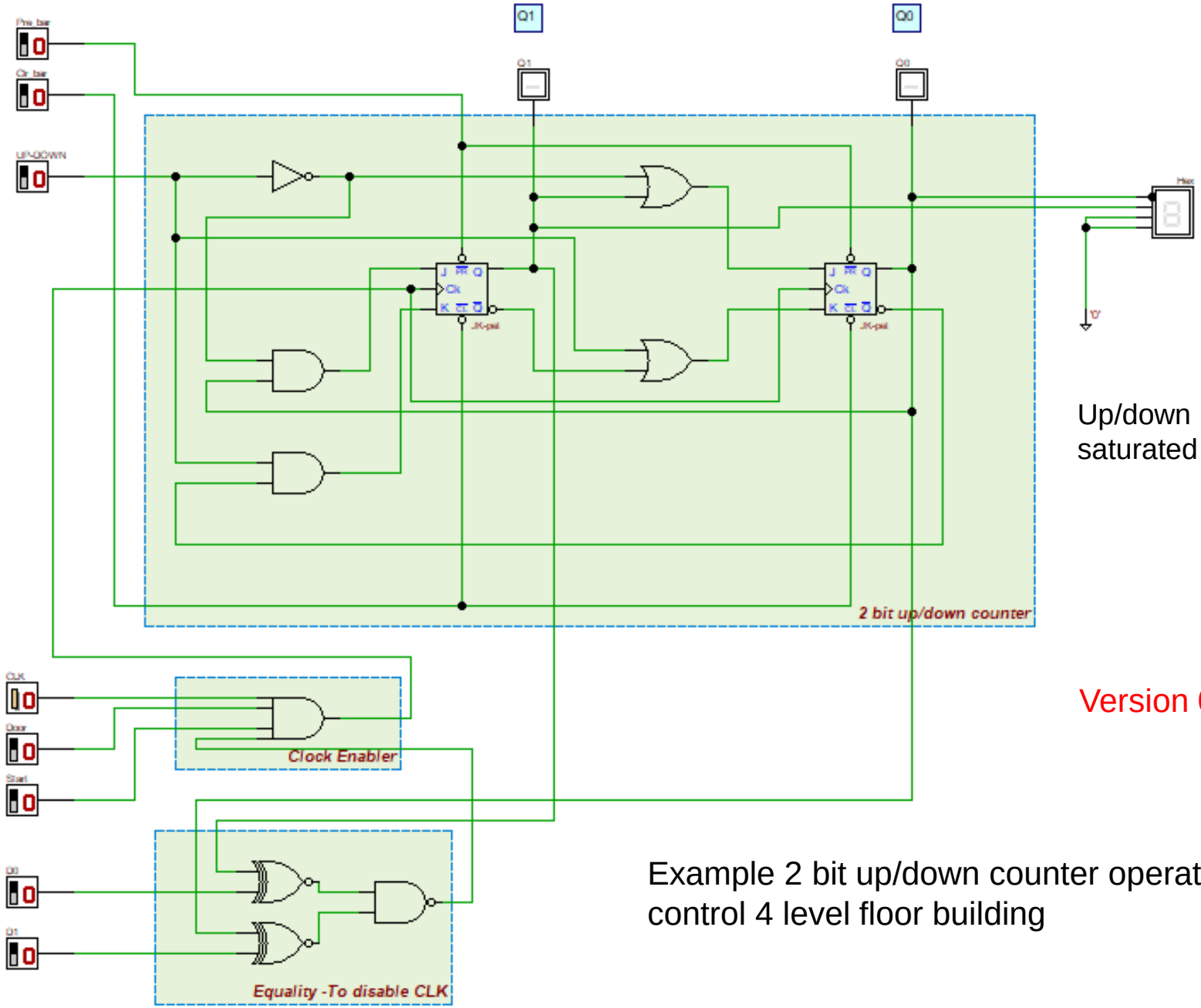

Up/down saturated

Version 02

Example 2 bit up/down counter operation to control 4 level floor building

Does it work (improved)?

Simulation Deeds

- Complete the circuit design and use Deeds to simulate the design
- Understand how to simulate:
  - Use Pre_bar/Clr_bar to reset or set Q (Asynchronous Input)
  - Use Pre_bar/Clr_bar (Synchronous input)
  - Use clock to execute up/down counter
- Understand how to operate lift up/down
- Write user manual operation note (step to operate) at the circuit for user reference

Use your creativity to arrange the circuit and to have interactive user interface to your system

Part 2

- Introduce advance features as much as possible
- Implement the features using concept of MSI Functional IC (in Chapter 6)
- Develop and implement the simulation system using Deeds

Activities Part 2: ADVANCE Lift Controller System

- Design advanced lift controller system

`A hotel visitor want to use a building lift to go up from one level to another. The requirements are put in the desired level to go, tag the visitor room card, closed the lift door, and push UP button. Then, the lift will goes up by counting up one level to another until its reaches to the desired level. The door will open and at the same time alert will be given to the visitors. Similarly, the reverse process happen when the visitor want to go down. The counting sequence will decrease until it reaches to the desired floor.

Example features

- Lift Going UP
  - Welcoming Note
  - Key in level up
  - Tag in card hotel
  - Door Close
  - Enter Password
  - Lift goes up to destination
  - Lift stop at destination
  - Sound notification
  - Door Open

- Lift Going DOWN
  - Welcoming Note
  - Key in level down
  - Tag in card hotel
  - Door Close
  - Enter Password
  - Lift goes down to destination
  - Lift stop at destination
  - Sound notification
  - Door Open

Integration

INTEGRATE COMBINATIONAL & SEQUENTIAL CIRCUITs

Options of System Controller in real life (other possible simulation system)

- Lift/Elevator Building
- Photostat Machine
- Car Park
- Washing Machine
- ATM machine (Bank)

Lift Building UP

- Lift UP
  - Key in level up
  - Tag in card hotel
  - Door Close
  - Lift goes up to destination
  - Lift stop at destination
  - Sound notification
  - Door Open

Lift Building DOWN

- Lift DOWN
  - Key in level down
  - Tag in card hotel
  - Door Close
  - Lift goes down to destination
  - Lift stop at destination
  - Sound notification
  - Door Open

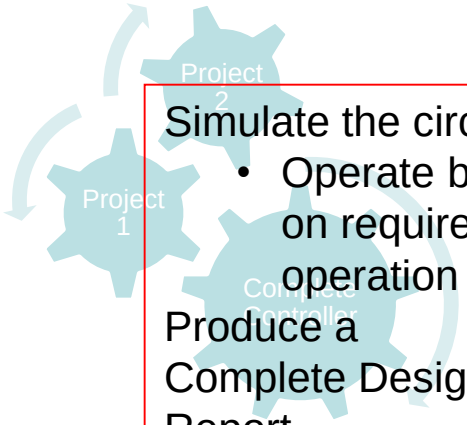

Simulate the circuit

- Operate base on required operation

Produce a Complete Design Report

Accessories / Advanced Features

- E.g. Welcoming Notes, security element, Interactive Display System, Etc

Report Format

Format

- Times New Roman 12 font
- 1.5 spacing
- Turn on MS Word spell and grammar checker

What should be in the report?

- TITLE PAGE
- DEDICATION & ACKNOWLEDGEMENT
- TABLE OF CONTENTS
- REPORT CONTENT
- REFERENCES
- APPENDICES

Under Appendices

- list of tasks distribution among members of group
- Photo(s) of your group working together
- And others supporting materials that will strengthen the explanation of your project.

PROJECT REPORT CONTENT

- You may use the lab manual as guidance and inspiration. Don't forget to cite the manual.

1) The background
2) The Problem
3) Suggested Solution (must Include the block diagram and explain)
4) The Requirement
5) System Implementation (must include DEEDS drawing and explain)
6) Conclusion and Reflection
   - Summarizes the whole project. Write your reflections.
   - Describe your achievements, strength and weaknesses.
   - Propose future work to improve your design

Project Timeline

Date	Activity
1	Briefing & group setup
2	Work on Part 1 and discuss enhancement (Part 2) with lecturer
3	Receive approval/comments for improvement
4	Work on project
5	Submit Part 1.pbs and Part 2.pbs (initial demo)
6	Project report develop/improve (discuss with lecturer)
7	Submit Project .pbs, Project Report, Presentation/Demo Video

All **submission** is through **e-learning** and **due date** of submission is **25 Jan 2026** (end of study leave)

WHAT YOU SHOULD SUBMIT

1. A Complete report design of your project
2. A short Slide Presentation
3. Recorded of short video presentation (Group Presentation)
4. Deeds design circuit (.pbs) with Manual Instruction
5. Recorded of short video Deeds Simulation - How your design is working.

Group Option Design

Group	Option
1	3 bit Counter, JK flip-flop
2	3 bit Counter, D flip-flop
3	3 bit Counter, T flip-flop
4	3 bit Counter, JK flip-flop
5	3 bit Counter, D flip-flop
6	3 bit Counter, T flip-flop
7	3 bit Counter, JK flip-flop
8	3 bit Counter, D flip-flop

HAVE FUN & GOOD LUCK